Easy to Make Desk Set for Organization

DIY Plans to Make a Wood Desk Set

This post contains affiliate links. What that means is if a link is clicked and a purchase made, I will receive a small commission. Thank you for supporting DbSC!

The ~~groans~~ happy squeals of students looking forward to going back to school can be heard everywhere so why not get them started off right with a super-fancy desk set? The DIY plans to make a wood desk set feature a magazine or paper organizer, a tray to hold supplies and a square pencil cup. The best part about these plans is that *there are no fasteners involved*! Yep, it is true… I used a fast-drying adhesive to assemble the set! The set is quick and easy to make with no delay in getting the school year started off right (and you can do your happy dance)!

Materials:

- Fast drying adhesive such as DAP® Rapid-Fuse wood adhesive

Tools Needed:

- Table Saw or Circular Saw
- Miter Saw or Jigsaw
- Carpenter's Square
- Pencil

Lumber:

- 1 – 2′ x 4′ sheet of 1/4″ plywood

Cut List:

Magazine/Paper Holder

- 1 – 1/4″ plywood at 3-3/4″ x 11-3/4″ – Back End
- 1 – 1/4″ plywood at 3-3/4″ x 4″ – Front End
- 1 – 1/4″ plywood at 3-3/4″ x 9-1/4″ – Bottom
- 2 – 1/4″ plywood at 9-3/4″ x 11-3/4″ – Sides

Pencil Cup

- 2 – 1/4″ plywood at 2-3/4″ x 4″ – Ends
- 1 – 1/4″ plywood at 2-3/4″ x 2-3/4″ – Bottom
- 2 – 1/4″ plywood at 3-1/4″ x 4″ – Sides

Supply Organizer

- 2 – 1/4″ plywood at 2″ x 5-1/2″ – Ends
- 1 – 1/4″ plywood at 5-1/2″ x 11-3/4″ – Bottom
- 1 – 1/4″ plywood at 1-3/4″ x 11-3/4″ – Long Divider
- 3 – 1/4″ plywood at 1-3/4″ x 2-5/8″ – Short Dividers
- 2 – 1/4″ plywood at 2″ x 12-1/4″ – Sides

Click on the drawings for a larger view!

Notes about the project:

Measure the plywood you are using in this project to make sure it is 1/4″ thick. If it is not, a few adjustments will have to be made. For example, the ends and bottom of the magazine holder can be cut as normal but the sides may have to be cut slightly narrower. It will be the same for the sides of the pencil cup and the sides of the organizer.

Magazine/Paper Holder

Cut the pieces for the magazine/paper holder. Apply a bead of glue along the shorter edges of the bottom and position the end pieces on each side. If using Rapid Fuse, it sets up very quickly otherwise a few light clamps may have to be used.

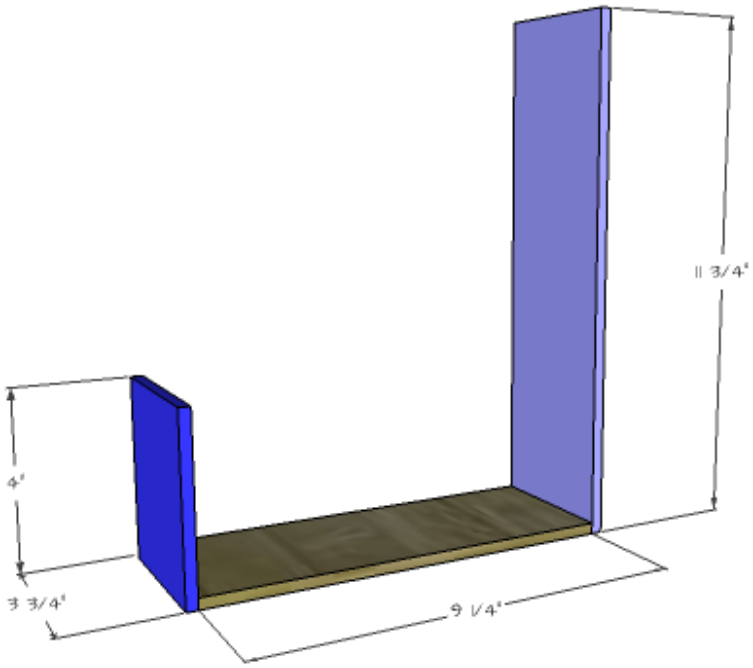

DESIGNS BY
STUDIO C

Apply a bead of glue along the side edges of the ends and the bottom, and position one of the sides aligning the pieces with each other. Repeat for the other side.

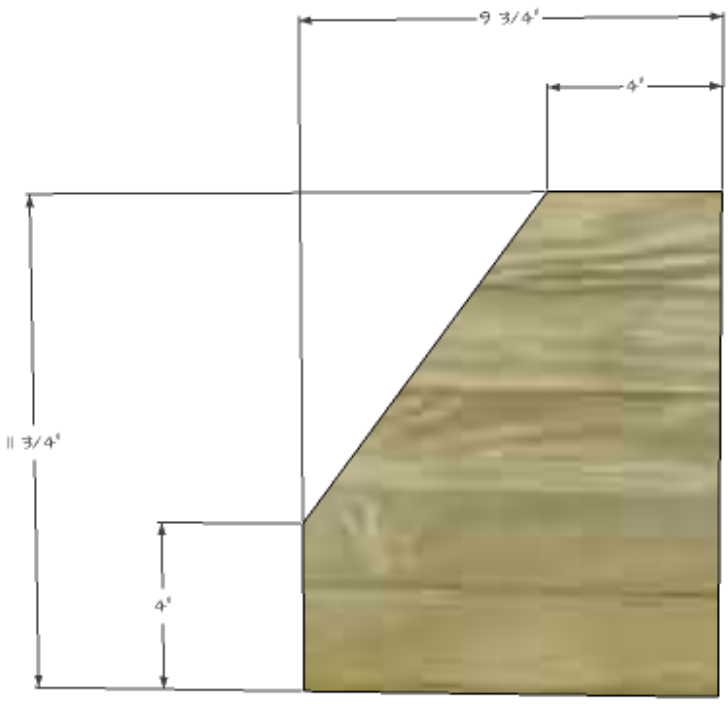

DESIGNS BY
STUDIO C

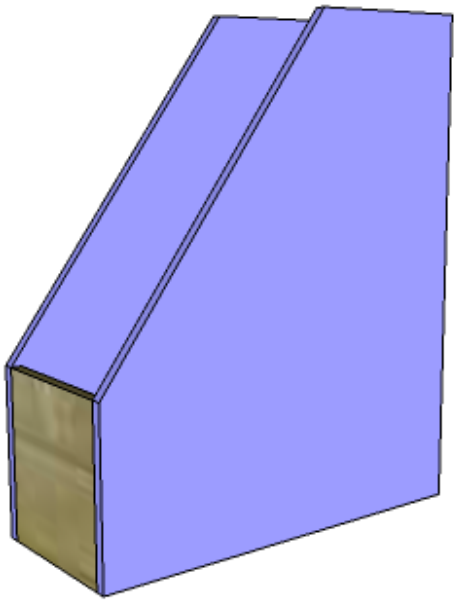

DESIGNS BY
STUDIO C

Pencil Cup

Cut the pieces for the pencil cup. Apply a bead of glue along two opposing edges of the bottom and position the end pieces on these edges.

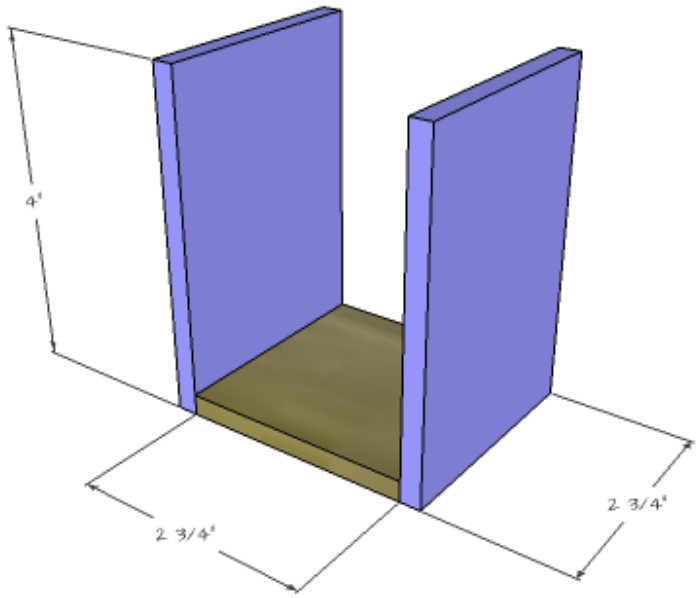

DESIGNS BY
STUDIO C

Apply a bead of glue along the side edges of the ends and bottom, and position one of the sides on top aligning all of the edges. Repeat for the other side.

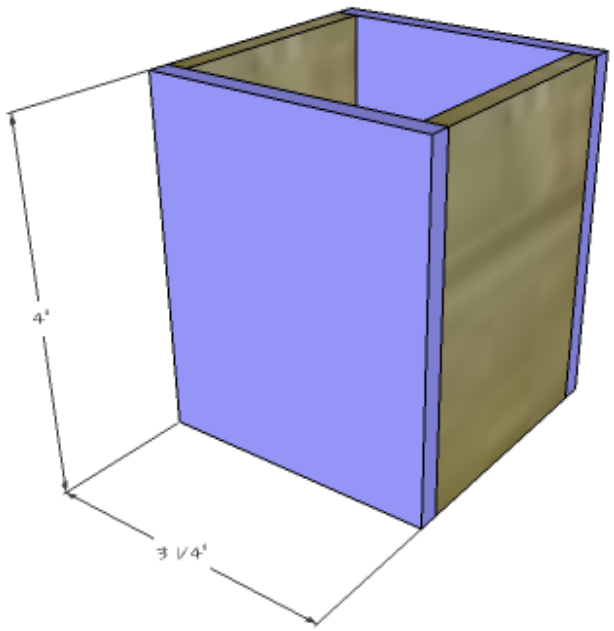

DESIGNS BY
STUDIO C

Supply Organizer

Cut the pieces for the supply organizer. Apply a bead of glue along the shorter edges of the bottom and position the side

pieces on the edges.

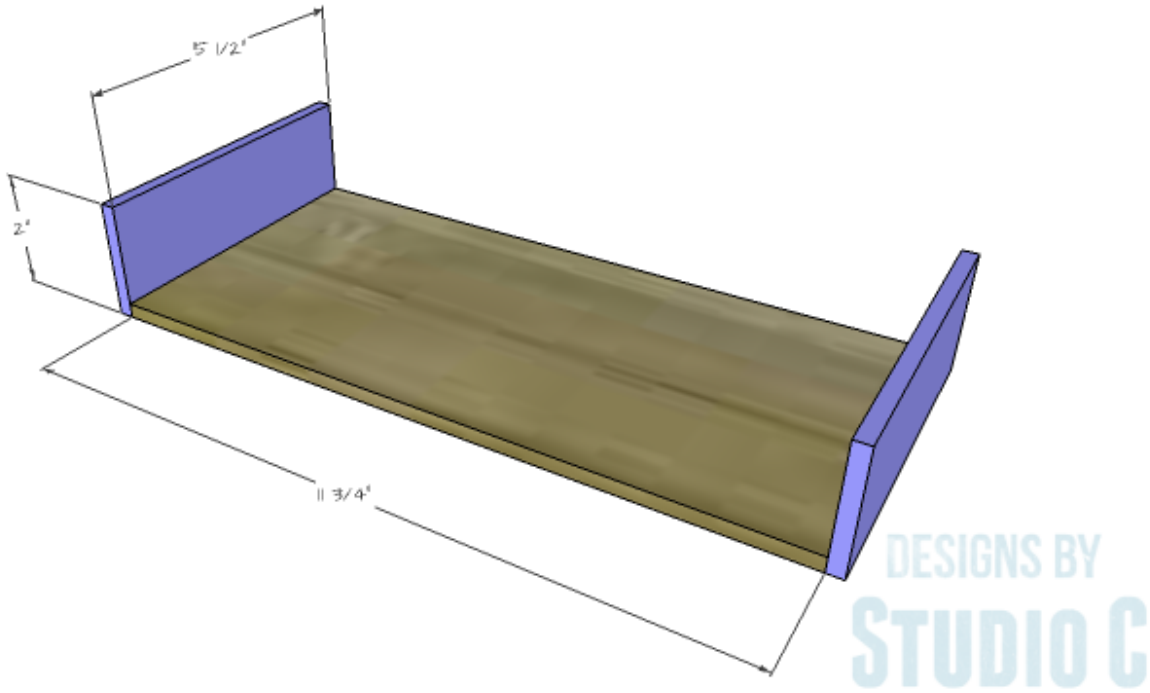

Mark the center of the sides and bottom. Apply a bead of glue along each short edge and one long edge of the long divider, then position the long divider along the center line.

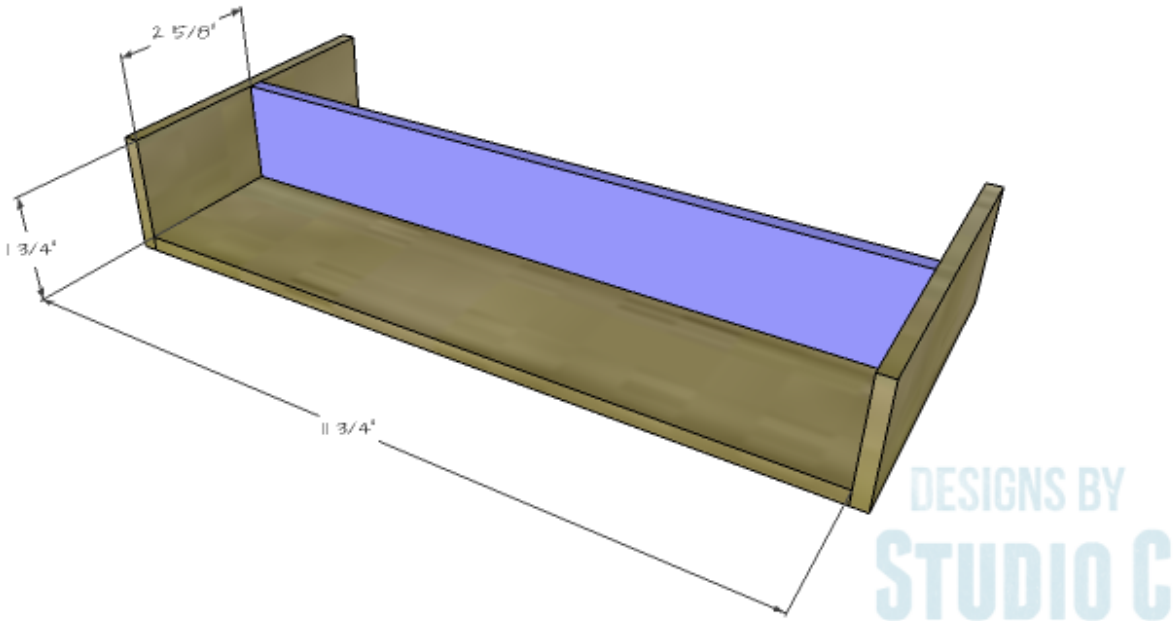

Mark the position of the shorter dividers. Apply a bead of glue along one short edge and one long edge. Position the

shorter dividers on the bottom against the long divider.

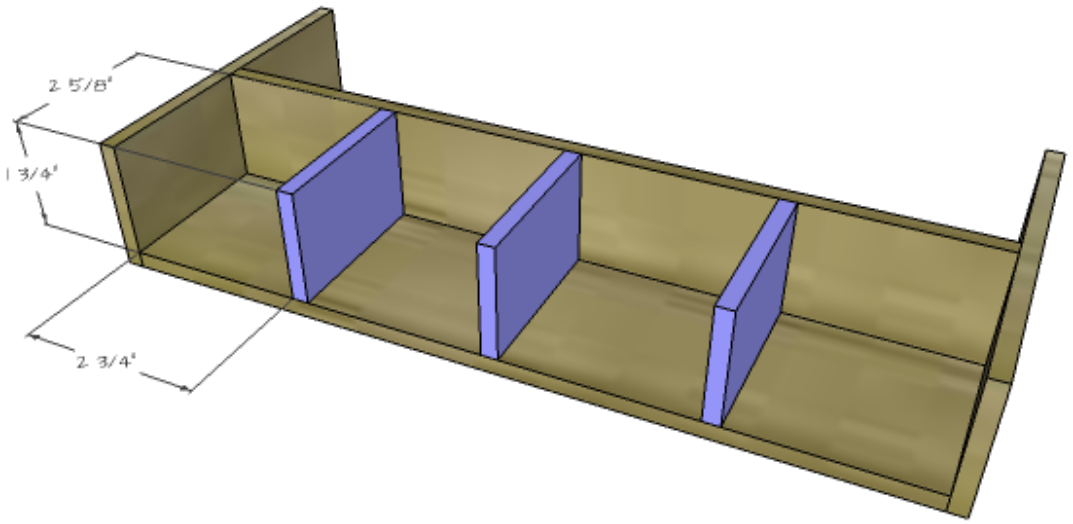

DESIGNS BY
STUDIO C

Apply a bead of glue along the edges of the shorter dividers, the ends and the bottom, and position one of the side pieces on these edges.

Apply a bead of glue along the side edges of the ends and bottom on the opposite side and position the remaining side piece on these edges.

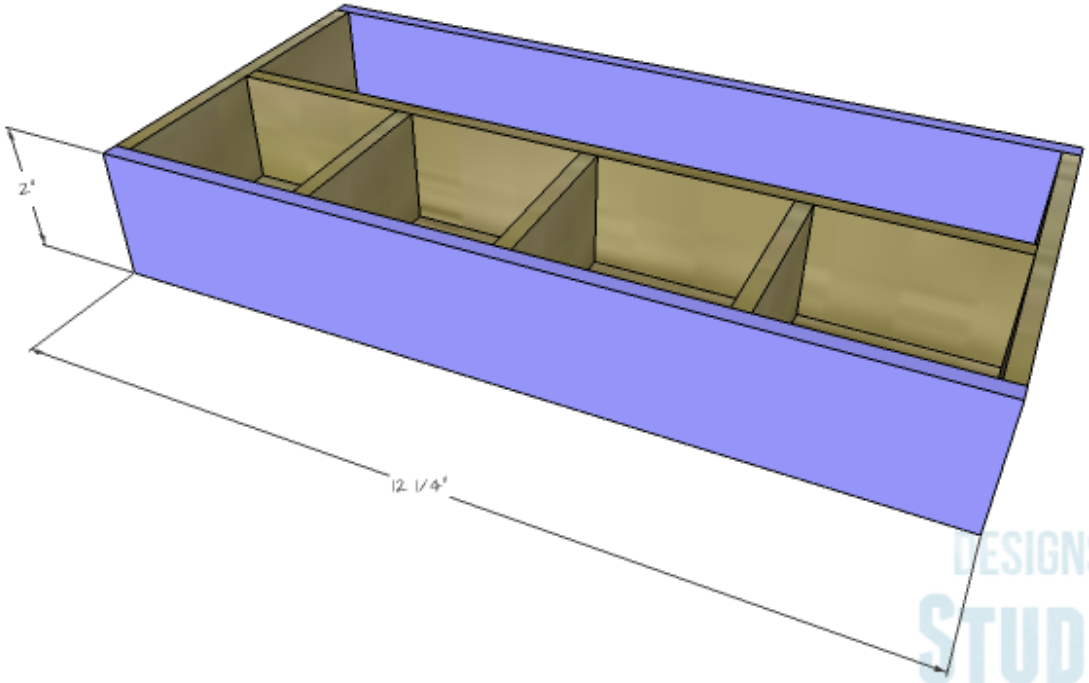

DESIGNS BY
STUDIO C

I used walnut plywood that was plain on the reverse side. I used the walnut side on the inside of each piece then covered the outside with scrapbooking paper and Mod Podge. The outside can be painted or stained, or finished however desired!

Have any questions about the DIY plans to make a wood desk set? Leave a comment below!